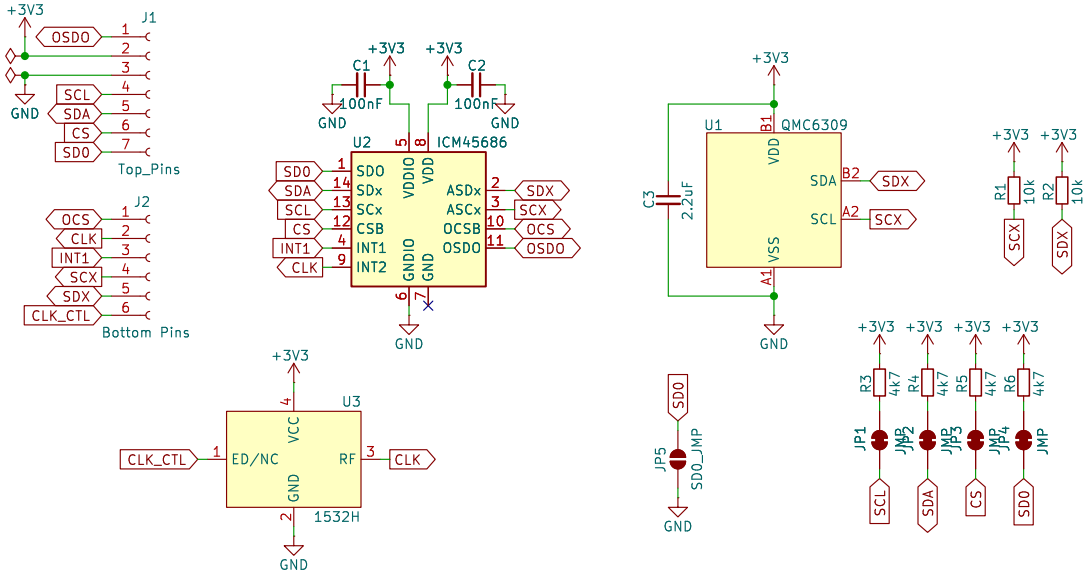

Sheet: /
File: Mumo.kicad_sch

Title:

Size: A5	Date: 2025-06-20	**Rev: v3**
KiCad E.D.A. 9.0.2		Id: 1/1